Co-Simulation of 600KW Traction Induction Motor Fed by PWM Inverter

Xiang Zhao[1, a], Huijuan Liu[1], Zhongfeng Zuo[1], Haijiao Zhang[1], Yiduan Chen[1]

[1]School of Electrical Engineering, Beijing Jiaotong University, Beijing, 100044, China

[a]11121716@bjtu.edu.cn

Keywords: High power traction induction motor, finite-element computation, field circuit coupled finite element analysis, PWM inverter.

Abstract. This paper attempts to present a dynamic model involving Finite Element Analysis and Equivalent Circuit simulation together for PWM inverter fed induction motor assisted based on Maxwell 2D and Simplorer. The nonlinear magnetization characteristics have been considered and calculated by FEA software Maxwell. The circuits of the inverter are built by using the circuit components in Simplorer environment. The magnetic fields distribution, the torque and the winding characteristics of the induction motor are presented

Introduction

Ac motor has many distinct advantages, such as of simple structure, reliable operation and small volume of specific power [1]. With the constant perfection and development of high power variable frequency device and its control technique, the application of AC motor as the locomotive traction motor has become an important development direction of traction drive. Three-phase AC asynchronous traction motors and synchronous traction motors have their own strong points respectively, the comparison of them is still not clear yet. But on the motor itself, induction motor has the more simple-firm structure [2]. Now, High power inverter fed induction motors are widely used in high speed railway traction applications [3]. There are approximately three methods to change motor rotational speed. First one is changing slip ratio; second one is changing the number of motor poles; third one is change power supply frequency. The two former approaches cannot adapt to the requirements of locomotive traction. However, high velocity precision, wide speed range and step-less speed adjustment can be realized in the variable frequency speed regulation system [4-5]. Frequency control is an ideal speed regulation method. However, there are certain practical issues involved, like system harmonic increase, motor torque ripple, etc. which need to be taken care of and are addressed by various researchers [6].

A unique advantage of Ansoft/Simplorer is the ability to integrate FEA generated models within a system simulation. Many components that comprise nonlinear dynamic systems such as electrical machines must be modeled using FEA to accurately represent the performance of the device.

In this paper, a new field-circuit coupled finite element method by using Simplorer and Maxwell is developed to compute a 600kW traction induction motor fed by PWM inverter. The magnetic fields distribution, the torque and the winding characteristics of the traction induction motor are presented. Furthermore, the traction induction motor fed by sinusoidal voltage is simulated individually by Maxwell as comparison.

System Model

Maxwell Model of Traction Motor. This traction motor is a three-phase and four-pole induction motor. The main dimension of the traction motor is shown in Table 1. The finite element simulation model of this motor is shown in Fig. 1. The mesh division of the model is shown in Fig.2.

Table 1 Main Dimensions

Rated Power (kW)	600	Rated Speed (rpm)	4104
Rated V (V, rms)	2600	Rated Freq. (Hz)	140

Power Factor	0.84	Pole number	4-pole
Stator OD (mm)	495	Rotor OD (mm)	282.6
Stator ID (mm)	285	Rotor ID (mm)	90
Stator Slots	60	Rotor Slots	50
Air gap (mm)	1.2	Stack Length (mm)	220

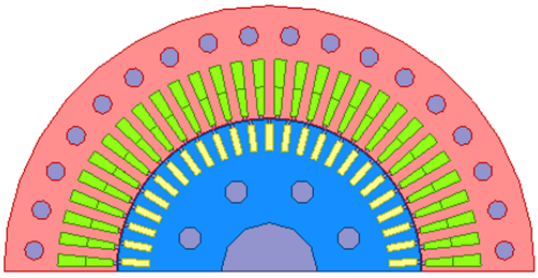

Fig. 1 Model of induction motor

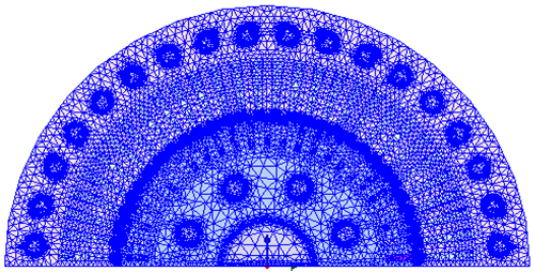

Fig. 2 Mesh division

PWM Inverter Circuit and System Model. The main circuit of PWM inverter is built by the circuit component module in Simplorer, there are 6 IGBTs switches and 6 stream diode modules.

In PWM inverter control circuit, TRIANG module serve as carrier wave generator and SINE module serve as modulation wave generator. Each sinusoidal signal is shifted by 120 degrees based on a same frequency. The modulation method is usually made up of asynchronous modulation, synchronous modulation and hybrid modulation. The synchronous modulation has an advantage that output waveform is symmetrical. Considering the advantage of synchronous, the inverter is designed a synchronous modulation SPWM inverter circuit. Its carrier wave ratio is designed N=9, modulation index is designed M=0.75. The rated line voltage of the induction motor is 2600V and rated frequency is 140Hz, so its rated phase voltage is about 1500V. The parameters of PWM inverter circuit component are set as shown in Tab.2.

Table 2 Main Dimensions

Name	Type	Quantities
E1	DC	EMF value(V)=5656
TRIANG1	-	Amplitude=2828V, frequency=1260Hz, phase=0degree
SIN1	Sine (time control)	Amplitude=2121V, frequency=140Hz, phase=0degree
SIN2	Sine (time control)	Amplitude=2121V, frequency=140Hz, phase=-120degree
SIN3	Sine (time control)	Amplitude=2121V, frequency=140Hz, phase=120degree
V_ROTB1	-	4104rpm

According to each module of all above built, the PWM inverter fed induction motor system can be composed of the entire systematic model. Fig. 3 shows the simulated system model for the study of inverter fed induction motor. In the systematic model, Motor Rotation Speed is given rated speed 4104rpm by V_ROTB1 module.

$R1$, $R2$, $R3$ is the resistance of the winding end parts, and $L1$, $L2$, $L3$ is the inductance of the winding end parts. Moreover, the input phase voltage amplitude of the following individual simulation by Maxwell is 2121v, and frequency is 140Hz. Each sinusoidal phase voltage is shifted by 120 degrees.

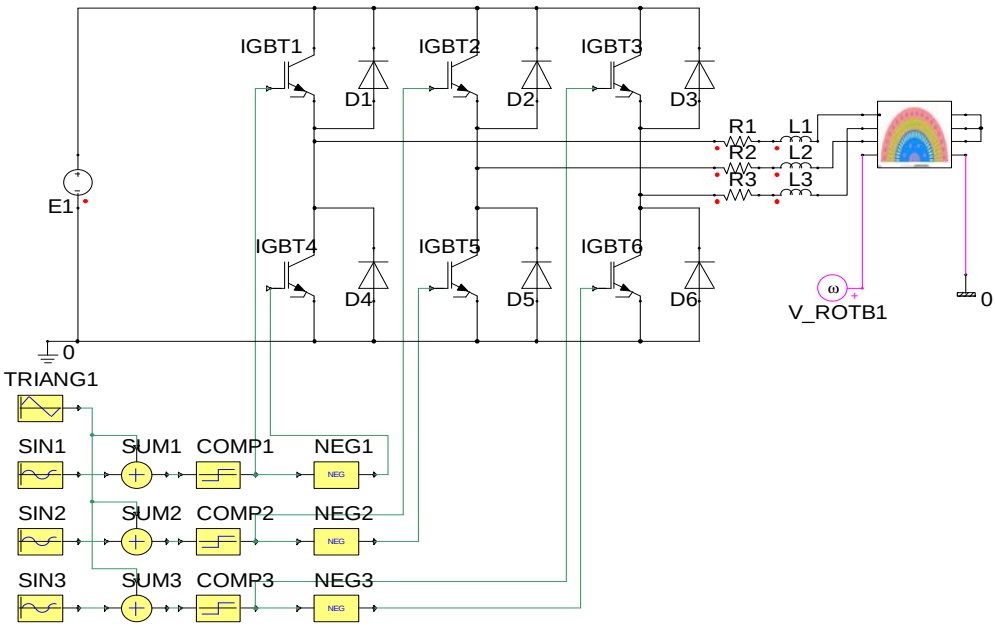

Fig. 3 Simulated system model

Simulation Results and Analysis. As mentioned above, in addition to the co-simulation, there is an individual simulation as comparison, which is simulated sinusoidal voltage power supply fed induction motor by Maxwell.

Comparison of Magnetic Field Distribution.

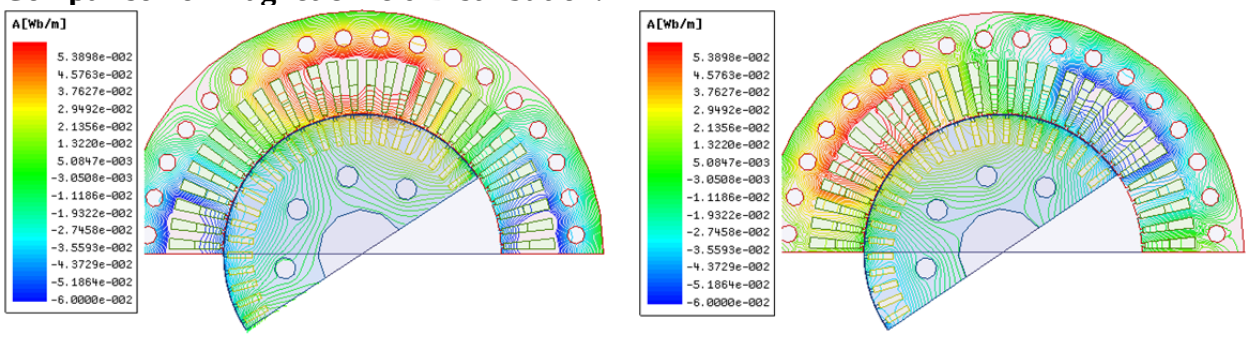

(a) Model of co-simulation (b) Model of individual simulation

Fig. 4 Flux distribution at 0.63s

The flux distributions at 0.63s of the two induction motor models are shown in Fig. 4(a) and Fig. 4(b) respectively.

Comparison of Winding Characteristics. From the Fig. 5(a), we can find that the induced voltage have the distortion, because the induced voltage contains harmonics. Under the ideal condition, the waveform should be as shown in Fig. 5(b).

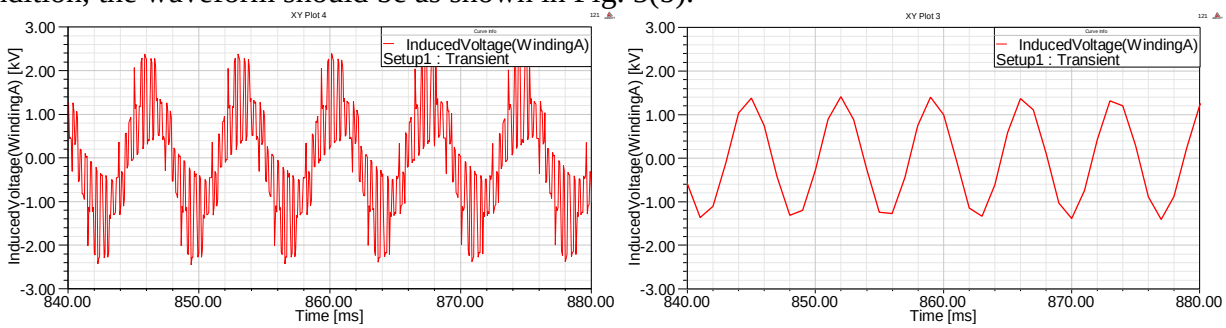

(a) Model of co-simulation (b) Model of individual simulation

Fig.5 Induced voltage of phase A

Comparison of Torque. In variable frequency speed regulation system, Inverter power supply fed induction motor. Except fundamental wave, the output voltage of inverter contains higher harmonics inevitably, shown as the non-sinusoidal wave. These harmonics generate steady harmonic and pulse harmonic electromagnetic torques. The influence of steady harmonic

electromagnetic torque can be neglected, but pulse harmonic electromagnetic torque lead to motor torque ripple. Fig. 6 shows the waveforms of torque versus time. From the Fig. 6, we can find the average value in (a) is a little smaller than (b), and (a) have some torque ripple.

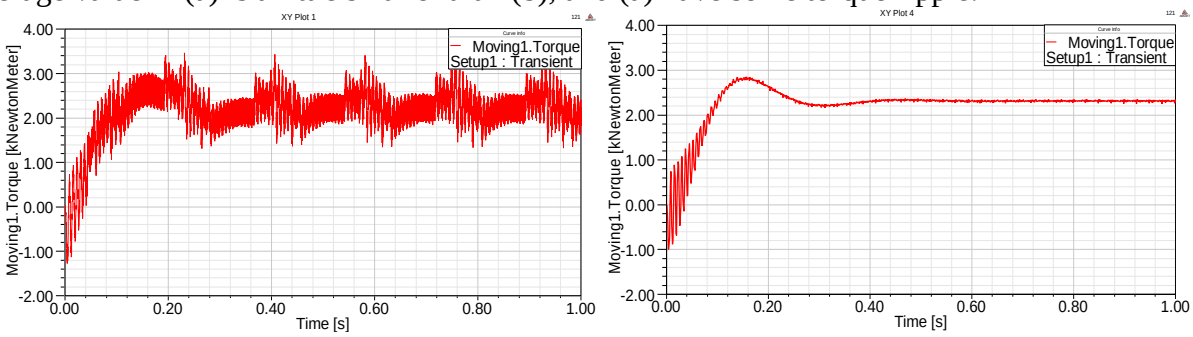

(a) Model of co-simulation (b) Model of individual simulation

Fig. 6 Torque versus time

Summary

In this paper, a dynamic model coupling 2D finite element method in Maxwell and equivalent circuit simulation in Simplorer is proposed to compute the performances of a 600kW traction induction motor fed by PWM inverter. The nonlinear magnetization characteristics have been considered and calculated by FEA. The circuits of the inverter are built by using the circuit components in Simplorer. The magnetic fields, the winding characteristics and the torque of the traction induction motor are presented. The performances of the traction induction motor fed by sinusoidal voltage are computed as comparison with that of fed by PWM inverter. All results of the two simulation methods are compared for revealing the effect of PWM inverter.

References

[1] Benyin Shen, “Traction motor”, Beijing, China, China Railway Publishing House, 2010.

[2] Suresh, G.; Toliyat, H.A.; Abur, A., "Analysis of the effect of feeder cable on the stator winding voltage stress in a PWM induction motor drive," Electrical Insulation Conference, 1997, and Electrical Manufacturing&Coil Winding Conference. Proceedings, vol. no. pp. 407-412, 22-25 Sep.1997.

[3] Weida Xie, “Electric traction and control”, Beijing, China, China Railway Publishing House, 2010.

[4] Oleschuk, V.; Profumo, F.; , "Synchronous balanced control of cascaded two-level inverters with separated DC sources," Power Electronics and Applications, 2007 European Conference on , vol. no. pp.1-10, 2-5 Sept. 2007.

[5] Cheok, A.D.; Kawamoto, S.; Matsumoto, T.; Obi, H., "High power AC/DC converter and DC/AC inverter for high speed train applications," TENCON 2000. Proceedings, vol.1, no., pp.423-428 vol.1, 2000.

[6] Lettl, Jiri, "Matrix Converter Induction Motor Drive," Power Electronics and Motion Control Conference, 2006. EPE-PEMC 2006. 12th International, vol., no., pp.787-792, Aug. 30 2006-Sept. 1 2006.