Testing of Axleboxes for Railway Vehicles on the TBRB 01 Test Bench in Accordance with EN 12 082

Ján Šteininger[1] Slavomír Hrček[2], Igor Gajdáč[2], Peter Spišák[1] and Jakub Fiačan[1]

[1]Institute of Competitiveness and Innovations, University of Žilina, Univerzitná 1, 010 26 Žilina, Slovakia
[2]Department of Design and Mechanical Elements, Faculty of Mechanical Engineering, University of Žilina, Univerzitná 1, 010 26 Žilina, Slovakia
jan.steininger@fstroj.uniza.sk

Abstract. The TBRB 01 (Testing Bench for Railway Bearings) is designed for testing axleboxes in accordance with EN 12082:2017+A1:2021 Railway applications- Axleboxes- Performance Testing. The subject of the test is a structural group consisting of a housing body, rolling bearings, in this case, cylindrical roller bearings, seals, and usually a grease lubricant. A preliminary test is carried out on such a design group basically run-in of the bearings is carried out. The preliminary test consists of loading the bearings with a radial force and successively loading the bearings with an axial force and speed. Subsequently, a performance test is performed during which the bearings are loaded according to the designed parameters and standards. During the test, temperatures, loading forces, rotational speeds, air velocity on the axleboxes, etc. are checked. These values are recorded and evaluated in the test equipment's hardware and software. The bearings are subjected to thermal, mechanical, and visual criteria in accordance with the standard. The lubricant is analyzed for the content of selected metals according to the bearing design.

Keywords: Railway Applications, Axleboxes, Performance Testing.

1 Introduction

To improve the reliability, durability, capacity, and maintenance of the rail transportation system, there is a need to ensure the required quality, safety, and efficiency of axleboxes. Standard EN 12082:2017+A1:2021 (hereinafter referred to as the "Standard") has been drawn up with the purpose of standardizing the performance testing of axleboxes for all types of rolling stock. This standard specifies the principles and methods for a performance test on the test bench. The system under test consists of rolling bearings, housings, seals, and lubrication grease. The test consists of a bearing run-in, the so-called Pre-test, and the Performance test itself. [1] These types of tests are very time-consuming as the distance traveled can be as much as 800,000 km. These tests are therefore also expensive. The aim

M. Petr et al. (eds.), *62nd International Conference of Machine Design Departments (ICMD 2022),*
Atlantis Highlights in Engineering 28,
https://doi.org/10.2991/978-94-6463-423-5_47

of this article is to clarify the performance tests on the test equipment in accordance with the standard with a total distance traveled 50 000 kilometers. [2]

2 Materials and methods

The axleboxes tested consist of roller bearings with dimensions 130x240x80. Housing is called Wing design- Two primary springs besides bearing in the lower half of the housing. The labyrinth seal is used and full of synthetic lubrication grease.

2.1 Testing Bench for Railway Bearings

In terms of layout, the bench test consists of three main parts: the own test bench, hydraulic aggregates, electronics, and control systems.

The own test bench in Figure 1 consists of a steel support plate 1 on which the supporting bearing houses 2 are fixed. [3]

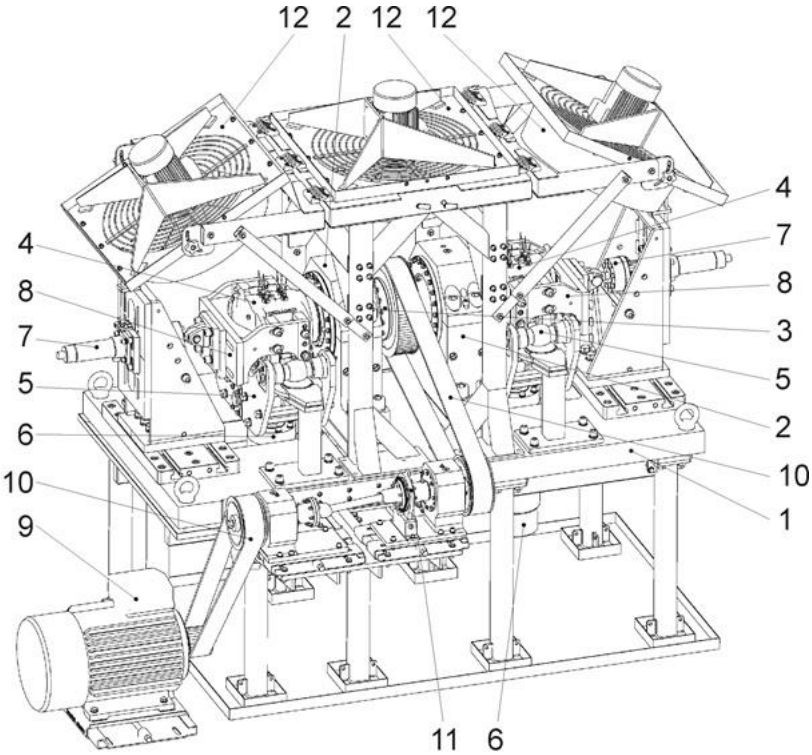

Fig. 1. Testing Bench for Railway Bearings

The main shaft 3 is mounted in the support bearings, on the ends of which, together with the bearings, the axleboxes 4 under test are mounted. Radial loads from radial

hydraulic cylinders 6 are transmitted to the housings through radial fixtures 5, as well as axial loads from axial cylinders 7 by means of axial fixtures 8. The shaft drive from the drive electric motor 9 is implemented by a belt drive 10, in which a torque sensor 11 is embedded. Cooling of the axle housings is provided by cooling fans 12. [4]

There are three hydraulic power packs. Aggregate 1 is used for lubrication and cooling of the support bearings. Unit 2 is a reserve for the possible need for lubrication and cooling of the bearings under test. Aggregate 3 is used for pressure relief in the radial and axial load circuits. [5]

Test forces $F_{rn}$and F_{an} shall be applied to each axleboxes under test as can be seen in the Figure 2.

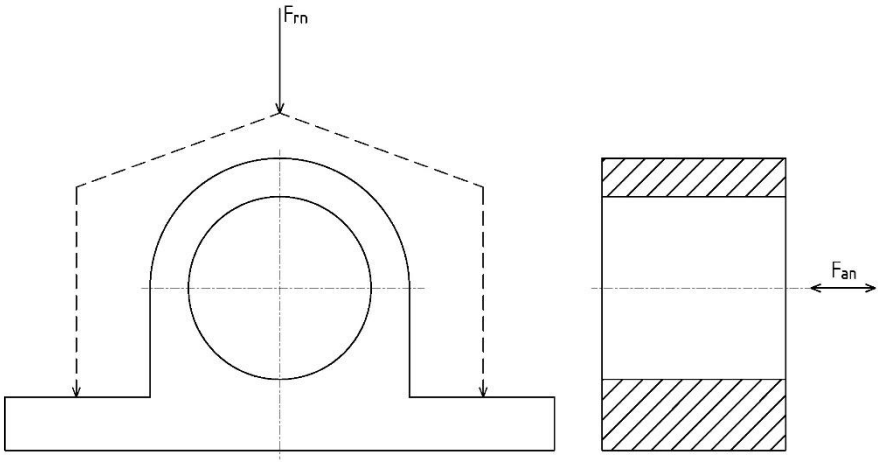

Fig. 2. Schematic representation of axlebox loading with test forces $F_{rn}$and F_{an}

These forces simulate the load on rolling bearings in real operation. A constant radial forceF_{rn}.

$$F_{rn} = 0{,}6 \times (F_o - m_2 \times g)[N] \tag{1}$$

Where m_2 is wheelset mass and masses on the wheelset between roiling circles, like a brake disc, etc. [kg], g is the acceleration due to gravity [m/s^2], and $F_o$is

$$F_o = \frac{1}{j} \times m_{max} \times g[N] \tag{2}$$

Where j is the number of wheelsets per vehicle [-], $m_{max}$is vehicle design mass according to EN 15663 [kg].

Alternating axial force in the axle axis F_{an}.

$$F_{an} = 0{,}255 \times \left(10^4 + \frac{F_o}{3}\right)[N] \tag{3}$$

2.2 Pre-test and Performance test

The preliminary test is carried out in order to monitor the warming-up of the bearings and for the correct distribution of the lubrication grease. This test consists of four cycles, each cycle consisting of two elementary trips, one in each direction of rotation. The speeds are 25%, 50%, 75%, and 100% of the maximum rotational test speed n_{test}.

$$n_{test} = \frac{110 \times v_{max}}{6 \times \pi \times d_{average}} [rpm] \tag{4}$$

Wherev_{max} is the maximum operational speed for normal service for which the vehicle shall be homologated [km/h], π is the Ludolphine number, and $d_{average}$ is the average wheel diameter between new and fully worn condition.

$$d_{average} = \frac{(d_{min} + d_{max})}{2} [m] \tag{5}$$

Where $d_{min}$is wheel diameter is at the limit of wear condition [m], and d_{max} is wheel diameter in new condition [m].

The applied axial force is 25%, 50%, 75%, and 100% of the nominal axial test force F_{an}. The nominal test radial force F_{rn} is maintained at its nominal value.

The performance test consists of repeated identical cycles. The cycle consists of two elementary trips, one for each direction of rotation.The elementary trips are separated by pauses and consist of a start-up phase, a rated speed n_{test}phase, and a deceleration phase to a final stop. The input values for the performance test can be seen in the Table 1. [6,7]

Table 1. Input values for the performance test

Symbol	Value	Description and Unit
n_{test}	678	Rotational speed corresponding to v_{max} increased by 10% [rpm]
$d_{average}$	0,86	Average wheel diameter between new and fully worn condition [m]
F_{an}	24 000	Nominal axial test force [N]
F_{rn}	139800	Nominal radial test force [N]
t_2	240	Time of 1 elementary trip [min]
t_3	5	Ramp up or ramp down time from n=0→n=n_{test}or n=n_{test} →n=0 during one elementary trips [min]
t_4	220	Time at rotational speed n_{test}during 1 elementary trip [min]
t_7	5	Time during which axial test force is applied [s]
t_9	5	Axial test force recovery time [s]
D	50000	Total distance travelled [km]

3 Results and discussion

3.1 Pre-test

4 test cycles were carried out during the preliminary test. The revolutions and axial load were gradually increased from 25% to 50%, 75%, and 100% of the nominal value. The test run ended when the temperature in the load area and the overheating area stabilized with the range of 5 degrees for at least 2 hours (see Fig. 3).

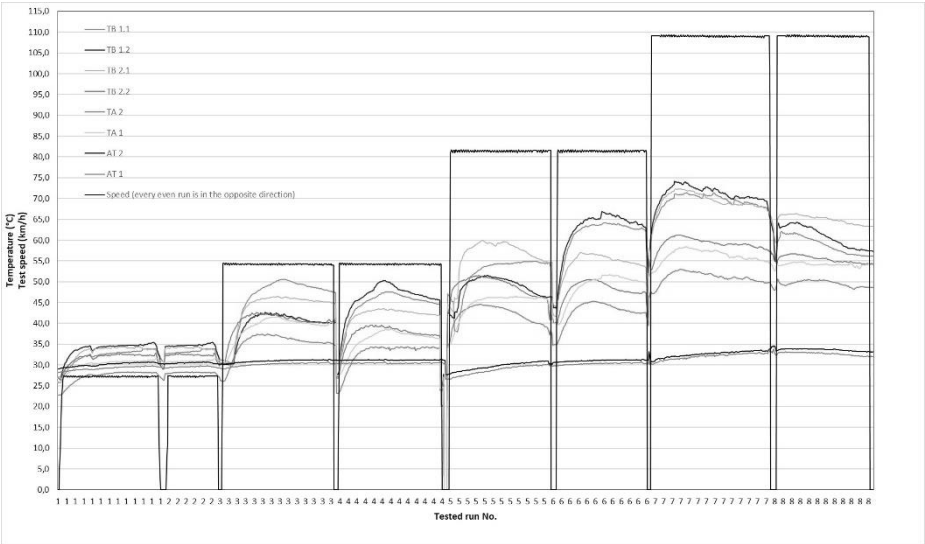

Fig. 3. Temperatures during the Pre-test

3.2 Performance test

The acceptance criteria for the performance test are as follows: temperature criteria, mechanical criteria, and physico-chemical criteria.

During the performance test, the temperatures in the load zone (1st rows of bearings, 2nd rows of bearings) and target zone (on the outside of the axleboxes) must be measured in accordance with EN 12082. The measured temperatures must be expressed as a deviation from the ambient temperature of 20°C according to the equation:

$$T_{z20} = T_{zm} - 0{,}6 \times (T_a - 20) \tag{6}$$

Where $T_{zm}$is measured temperature for the relevant bearing/axlebox, T_a is ambient temperature for the relevant bearing. For each temperature sensor, the maximum temperature in each elementary trip is selected. The course of temperatures can be seen in figure 4. [6,7]

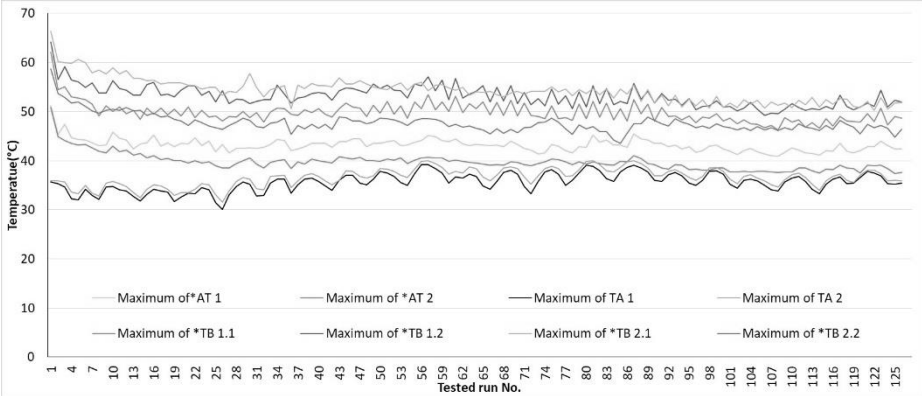

Fig. 4. Temperatures during the Performance test

Temperature criteria

Measured temperatures were evaluated using temperature criteria according to the standard EN 12082.

Criterion A: maximum temperature of the bearing in the load zone during each elementary trip, excluding the first 4 elementary trips. For each axlebox, for max 1 elementary trip, the maximum temperature may be between 90 °C and 100 °C. The evaluation of criterion A can be seen in figure 5.

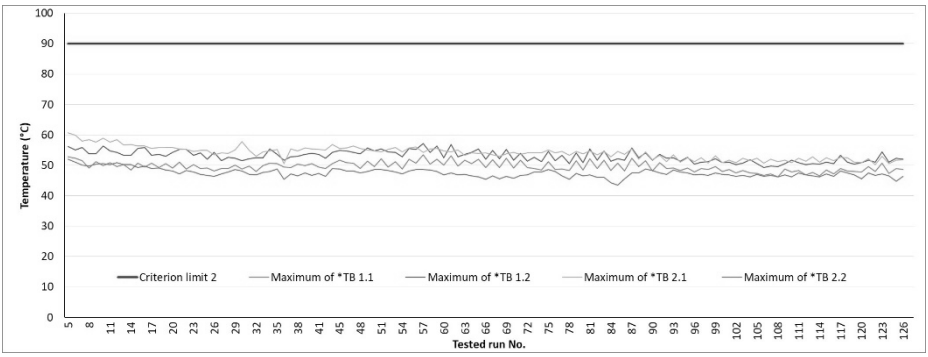

Fig. 5. The evaluation of criterion A

Criterion B: maximum temperature in the target zone during each elementary trip, excluding the first 4 elementary trips. For each axlebox, for a max of 1 % of elementary trips, the maximum temperature may be between 70 °C and 80 °C. The evaluation of criterion B can be seen in figure 6.

*Criterion C:*maximum temperature difference between the loading zone temperature sensors (comparisons between the inboard bearing row and outboard bearing row sensors are not permitted), simultaneously measured in the course of each elementary trip,

when the highest temperature in any load zone is ≥ 50 °C, excluding the first 4 elementary trips. For max 2 elementary trips, the max difference may be higher than 15 °C. The evaluation of criterion C can be seen in figure 7.

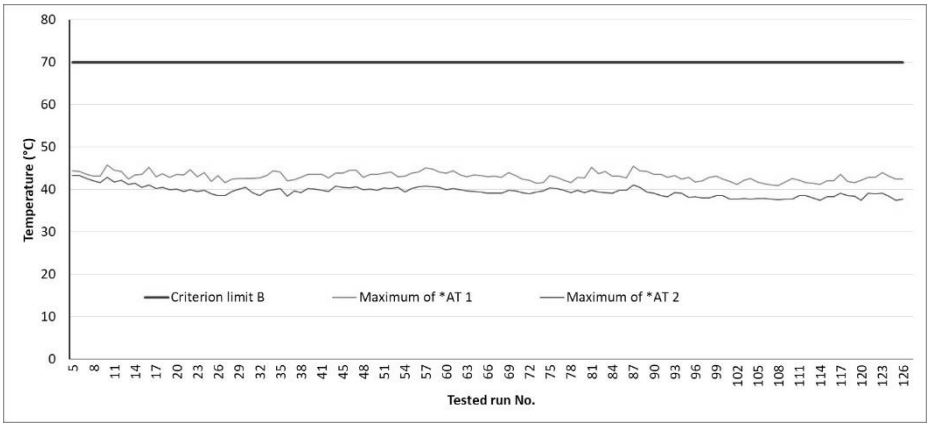

Fig. 6. The evaluation of criterion B

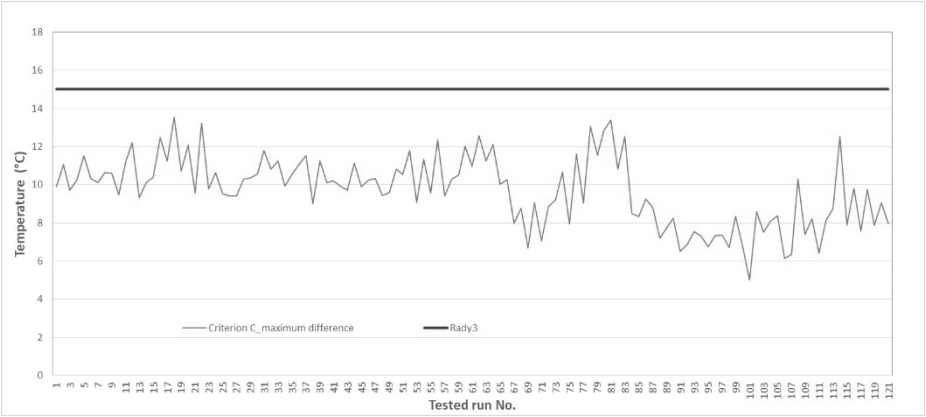

Fig. 7. The evaluation of criterion C

Criterion D: maximum temperature difference between the two axleboxes, simultaneously measured in the target zone in the course of each elementary trip, when the highest temperature in any load zone is ≥ 50 °C, excluding the first 4 elementary trips. For max 2 elementary trips, the max difference may be higher than 15 °C. The evaluation of criterion D can be seen in the figure 8.

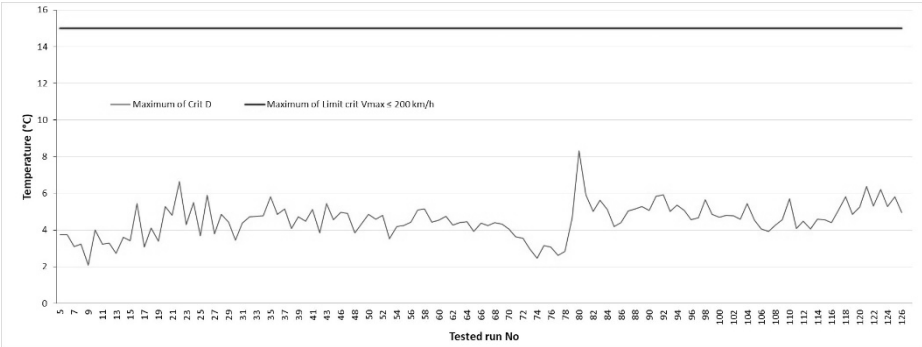

Fig. 8. The evaluation of criterion D

Criterion E1: For each load zone temperature sensor of axlebox1, the temperature difference between the two maxima of temperature was measured during two successive elementary trips, excluding the first 4 elementary trips. For max elementary trips, the max difference may be higher than 15 °C. The evaluation of criterion E1 can be seen in figure 9.

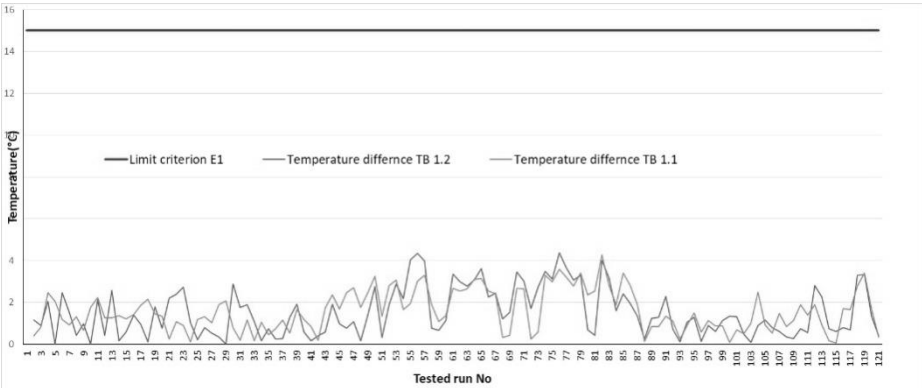

Fig. 9. The evaluation of criterion E1

Criterion E2: For each load zone temperature sensor of axlebox2, the temperature difference between the two maxima of temperature was measured during two successive elementary trips, excluding the first 4 elementary trips. For max 2 % of elementary trips, the max difference may be higher than 15 °C. The evaluation of criterion E2 can be seen in the figure 10. [7, 8]

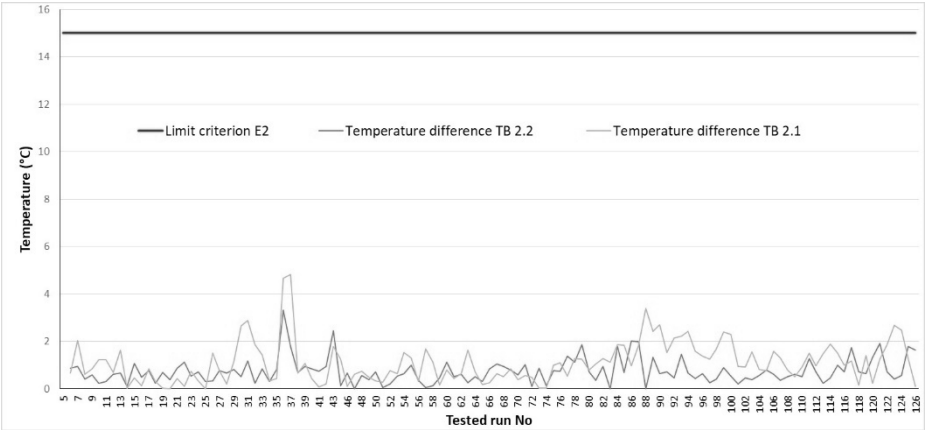

Fig. 10. The evaluation of criterion E2

Mechanical criteria and visual assessment

After the test, and removing all lubrication grease, a visual assessment of the individual bearing components shall be carried out. Visual assessment of bearing rings (outer and inner), rolling elements (figure 11), and bearing cages is the result of no damage and visible wear.

The assessment of mechanical criteria is as follows. Rollers and bearing rings (figures 12 and 13) raceways show no visible and no touch-sensitive defects, such as spalling or smearing. The end surfaces of each roller are smooth and polished and it is no present visual scuffing or rotational score marks. Cages (figure 14) show no breakage and no visible cracks. [9]

Fig. 11. Rolling elements after the performance test

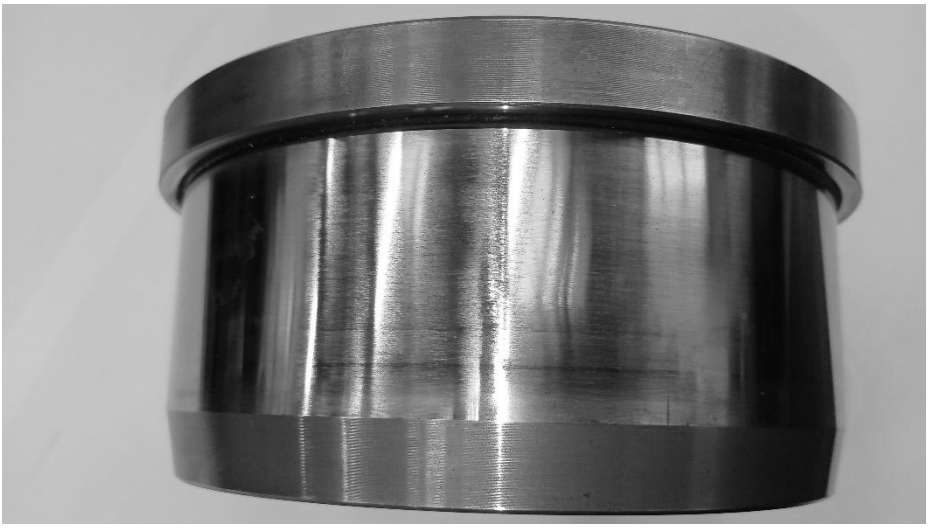

Fig. 12. Inner bearing ring after the performance test

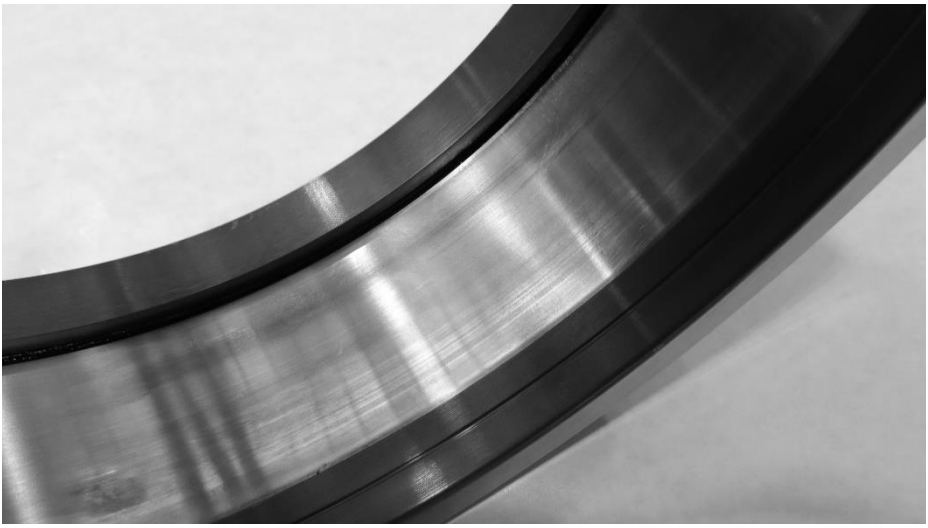

Fig. 13. Outer bearing ring after the performance test

Physical-chemical criteria

The lubrication grease is assessed for iron content as standard. Ten samples are assessed in accordance with EN 12082. In this case, the lubricant was not analyzed. The reason for this is that it is an internal bearing test and the distance traveled is very low. [10]

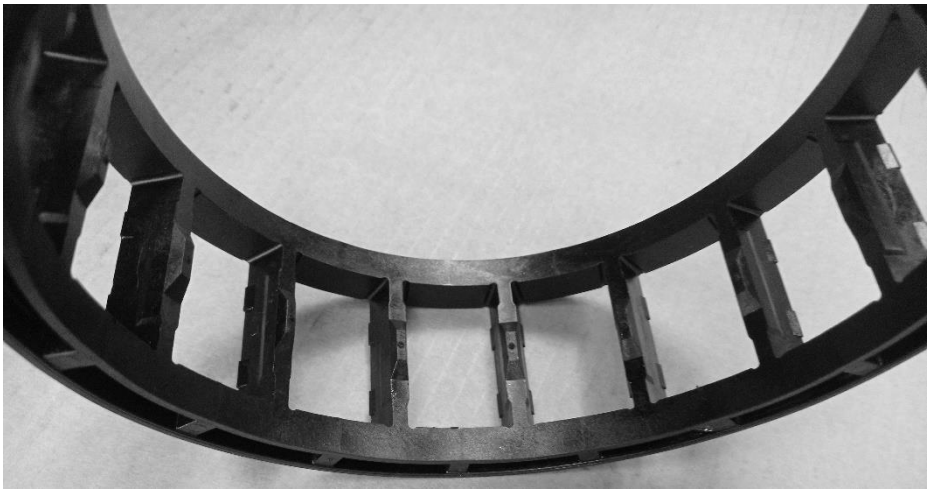

Fig. 14. Cage after the performance test

4 Conclusion

The axle boxes tested met the performance test criteria on the TBRB 01 test rig. Most of the temperature criteria (Criteria A, B, D, E1, E2) were well below the thresholds throughout the test.

The tested bearings also met the mechanical criteria (inner and outer bearing rings, roller elements, and bearing cages) and visual assessment, as no defects appeared on the surface of the components.

Lubricant analysis has not been performed. This is mainly due to the low total distance traveled. From experience in testing this type of bearing, it can be said that an analysis of the lubricant for iron content at this distance traveled would also be satisfactory.

The reason for this is the relatively low total distance traveled but also the high quality of the tested bearings and the lubricant used.
Thus, the axle boxes tested generally met the specified test conditions. [11, 12, 13]

Acknowledgements
This study is supported by Cultural and Educational Grant Agency of the Ministry of Education, Science, Research and Sport of the Slovak Republic under project no. KEGA 015ŽU-4/2020.

„This work was supported by the Slovak Research and Development Agency under the contract No. APVV-18-0457“.

References

1. Kucera, L.; Patin, B.; Gajdosik, T.; Palencar, R.; Palencar, J.; Ujlaky, M..: Application of Metrological Approaches in the Design of Calibration Equipment for Verification of Float Level Gauges. Measurement Science Review 20 (5), 230–235 (2020).
2. Kucera, L.; Gajdosik, T.: The Vibrodiagnostics of Gears. In:, Ševčík, L., Lepšík, P., Petrů, M., Mašín, I.,Martonka, R. 54th INTERNATIONAL CONFERENCE OF MACHINE-DESIGN-DEPARTMENTS, 2013, Modern methods of construction design, pp. 113–118. Springer, Heidelberg (2014).
3. Kanaval, J. - Cézová, E. - Starý, F. - Dynybyl, V., - Klíma, V.: Experimental analysis of modern screw fasteners. In: Experimental Stress Analysis - 56th International Scientific Conference, pp. 184–191. Česká společnost pro mechaniku, Praha (2018).
4. Kanaval, J. - Cézová, E. - Starý, F.: Screw Connections with Application of Modern Insurance Sealants and Adhesives Analysis. In: Medvecký, Š. ; Hrček, S., Kohár, R., Brumerčík, F., Konstantová, V. 59th INTERNATIONAL CONFERENCE OF MACHINE-DESIGN-DEPARTMENTS, Current Methods of Construction Design, pp. 295–301. Springer, Heidelberg (2019).
5. Gramblicka, S.; Kohar, R.; Madaj, R.: Construction design automatically adjustable mechanism for crane forks. . In: Herák, D. 58th International Conference of Machine Design Departments 2017, Proceedings of the 58th International Conference of Machine Design Departments, vol. 1, pp. 100–103. Prague: Czech University of Life Sciencis Prague, (2017).
6. Pennacchi, P.; Chatterton, S.; Vania, A.; Massocchi, D.: Definition of Damage Indices for Railway Axle Bearings: Results of Long-Lasting Tests. Machines 9 (1), 12 (2021)
7. ČSN EN 12082+A1. Railway applications - Axleboxes - Performance testing. Praha: Úřad pro technickou normalizaci, metrologii a státní zkušebnictví (2022).
8. Entezami, M.; Roberts, C.; Weston, P.; Stewart, E.; Amini, A.; Papaelias, M. Perspectives on railway axle bearing condition monitoring. Proc. Inst. Mech. Eng. Part F. J. Rail Rapid Transit 234 (1), 17–31 (2019)
9. Majchrak, M.; Kohar, R.; Kajan, J.; Skyba, R.: 3D Meshing Methods of Ball-Rolling Bearings. In: Bujňák, J., Guagliano, M., TRANSCOM 2019 13th International Scientific Conference on Sustainable, Modern and Safe Transport 2019, Transportation Research Procedia, vol. 40, pp. 784–791. Elsevier, (2019).
10. Gerdun, V.; Sedmak, T.; Šinkovec, V.; Kovše, I.; Cene, B. Failures of bearings and axles in railway freight wagons. Eng. Fail. Anal. 14, 884–894. (2007)
11. Mitka, M.; Bastovansky, R.; Brumercik, F.; Ignaciuk, P.: Local resistance of heating molybdenum sheet in a test device. Advances in Science and Technology-Research Journal 11(3), 87–93 (2017).
12. Hrcek, S.; Smetanka, L.; Steininger, J.; Patin, B.: Increase of durability in the area of line contact with curved body geometry. Mechanism and machine theory 6, 105010 (2022).
13. Gómez, M.J.; Castejón, C.; Corral, E.; García-Prada, J.C. Railway axle condition monitoring technique based on wavelet packet transform features and support vector machines. Sensors 20, 3575. (2020)