# Electronic pourer

Jiří Rejnart[1] and Ladislav Ševčík[1]

[1] Technical University of Liberec, Liberec, Studentská, Czech Republic
jiri.rejnart@tul.cz

**Abstract.** This article informs us about new design of electronic pourer. Pourer is using for dosing demanded volume of liquid for many purposes. At the same time shows us physical solution by new experimental methods. There is also introduce in builds form of technical view in 3D. Another we set the basic equation and physical formulas and methods of solution. These experimental methods enable comparison with the classical physical theory, for example, formulas of hydro mechanical continuity. Results and solutions are summarized in tables and graphs accompanied by images of the equipment. The invention also has the possibility to use electronic summary of information on the liquid consumption. Mistakes and errors can be root causes for changes in technological equipment, which may result in financial loses and at the same time lengthen the time of realization.

**Keywords:** Electronic pourer, Flienger formula, Bernoulli equation.

## 1 Introduction to electronic pourer as the new product

Electronic pourer is a new dispenser for gastronomic purposes that comprises a dosing head mounted on a bottle. This head enables an easy usage with the help of electronic system. This electronic equipment servo-valve placed in the head and controlled by position limited switch triggers the solenoid valve upon tilting the bottle into the working position. Thus, the liquid starts flowing up. This dosing process has its own source of energy. In preface, it seems necessary to point out that the invention was implemented in the program of INNOVATION by using modern experimental constructs, calculations and simulation methods.

### 1.1 Technical performance of dose system

On the view (see Fig. 1), is 3D model of concrete technical form and solution. We can see the plastic body, where is battery source for electronic system which control the process of dosing. On the display we can with help of buttons set on demanded volume. The plastic body have on the input of throat in bottle with using gummi packing as the stopper. If the bottle is such tilting we can decline at the angle 45° on the working situation. Position-switch will start the working process. Electromagnetic serving valve open system and liquid start flow out. After dosing serving-valve close the equipment.


M. Petr et al. (eds.), *62nd International Conference of Machine Design Departments (ICMD 2022)*,
Atlantis Highlights in Engineering 28,
https://doi.org/10.2991/978-94-6463-423-5_27

**Fig. 1.** The whole side of dosing pourer in head body, with packing to bottle and electronic system.

## 2 Electronic Pourer in the physical description as phenomenon of the side hydromechanics of basic compressing fluid

### 2.1 Physical solution of pourer

The whole problem is described with compilation of complete energetic equation. It we take from the Bernoulli equation. But this equation was arranged and extended of another transformation regarding the dose-pourer energy.

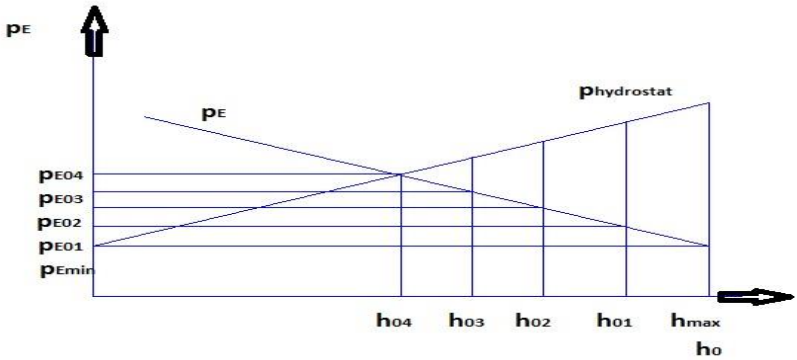


**Fig. 2.** Graph of hydrostatic height on the pressure.

We have to take into consideration that here is not the only simple flow up from the open container. It is a very complicated pouring process flowing up from the closed container and with air tube ventilation. In this process, not only hydrostatic pressure given by hydrostatic height may be influenced (see Fig. 3), reference list with [1]. Another view is on (see Fig. 3) build where are the hydrostatic heights for different volumes.

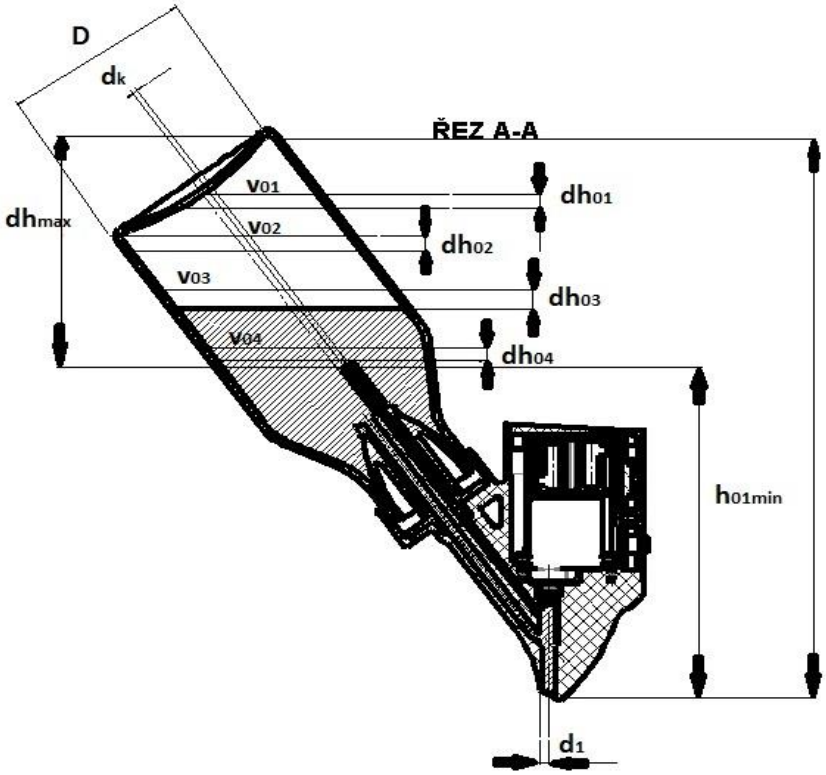


**Fig. 3.** View of body-head with bottle.

The sub-pressure of air arising in a closed container increases hydrostatic pressure. This disproportion can be solved by the tube-air ventilation. This process is described with help of the Flienger formula [1, 2] That is the reason why basic energy of Bernoulli equation was completed with two other energies. This equation (1) has its final shape as following:

$$gh1 + \frac{r.T\,m}{V} + \frac{p_1}{\rho} + \frac{v_1^2}{2} + \sqrt{\frac{m_{vzd}}{A}} \cdot \frac{1}{2\,\rho_{vzd}\,\Psi} = \text{const}\,. \qquad (1)$$

First of this another energy is sub-pressure of air described of Flienger formula (2) in the shape of

$$pE = \sqrt{\frac{m_{vzd}}{A}} \cdot \frac{1}{2\,\rho_{vzd}\,\Psi} \qquad (2)$$

There is:
A – area of ventilation tube,
$V_{vzd}$ – volume of air out on surface of water,
$\rho_{vzd}$ – density of air.

The second energy is pressure of air energies in formula (3).

$$P_{vzd} = \frac{r\,T\,m_{vzd}}{V_{vzd}} \qquad (3)$$

There is:
$V_{vzd}$ [ $m^3$ ] volume of air over water surface,
$m_{vzd}$ [ kg ] mass of air,
r = 287 [ J. $kg^{-1}$. $K^{-1}$ ] measure gas constant for air,
T [ K ] absolute temperature.

If we make some calculation as the time for which is dosing demanded volume, we can use the formula (4) for calculated time. Here is included pressure of hydrostatic, sub-pressure of air and balanced pressure of air. In the formula are also included losses in tube system [2]. The final formula is as the following:

$$t = \frac{2\,D^2}{3\,d^2} \sqrt{\frac{1+\xi_c}{2\left(g\,h_1 - \frac{p_{1max} - p_E}{p_{vzd}}\right)}} \left[h_o^{3/2} - h_1^{3/2}\right]. \qquad (4)$$

Another calculation we become the following Table 2.1, where is calculated time, necessary for dosing demanded dose, with using equation (4).

**Table 1.** Opening time dependent of demanded dose.

| Demand dose | 20 | 25 | 30 | 35 | [ cl ] |
|---|---|---|---|---|---|
| Time of opening | 0,75 | 0,94 | 1,13 | 1,31 | [ s ] |

# 3 New construct and simulations methods

## 3.1 Using PTC Creo

First, we created SOLID Works the basic model, reference in [3] Creo Distributed Batch, PTC Seaport Blvd. Boston, of flow out system in a construct program. This 3 D model was loaded to Creo Parametric. (see Fig. 4).

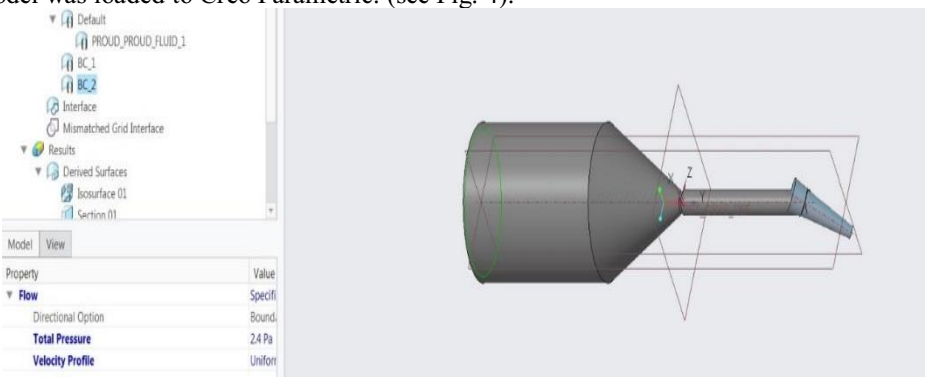


**Fig. 4.** The whole model of pour out system with bottle.

There we are working in further regime Flow Analysis, there we set on the input condition as the pressure, density etc. After then we started program of simulation. We got graphics instead (see Fig. 5) as pressure and volume in time. On the graphics simulation we can see on the first graph is course of fluid pressure and velocity. On the second is volume of fluid [kg/s] which flow out from dose pourer in a time interval. On the third is simulation volume of air above surface.

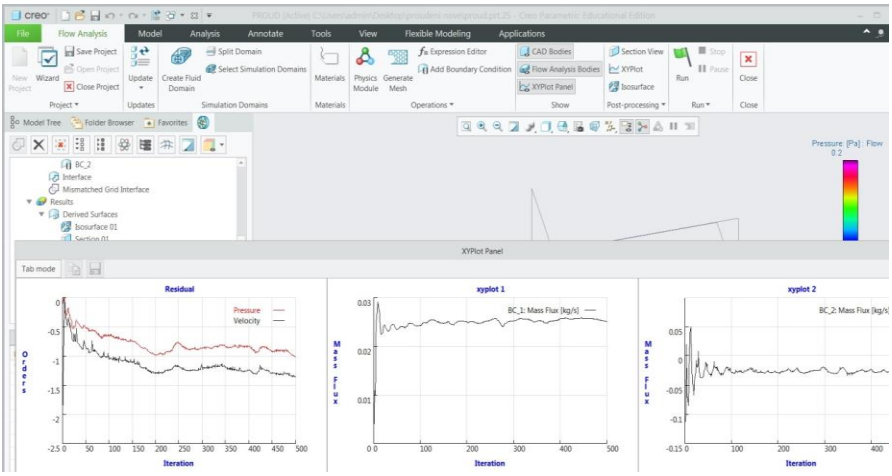


**Fig. 5.** Graphics simulation of results.

## 4 Conclusion

If we compare simulation results with calculation results and measure, we can close, that the results are very similar. There are for example in volume 20g is +/- 10 % mistake in time of 1 [s]. With using Creo Parametric [9] new construct and simulation methods we can reach very good results. Calculation with using equation (4), we become time which is necessary for demanded volume.
A mechanical pourer that gives a nominal amount with a certain error is also measured values in the range of 20 to 50 $cm^3$ with measured times of 1.5 to 4.7 s, the results are completely comparable.
In the last row, the results of the calculations that we subtracted from the graphs again give comparable values, for example 2.3 $cm^3$ in 13 s or 2.4 $cm^3$ in 15 s.
In conclusion, it can be stated that the calculation using the computer simulation in the Creo program confirmed compliance both for the calculation and the measurement within the possible accuracies. It should also be emphasized that all measurements were made on hand stopwatches, with several digital readout checks. For this reason, several measurements were always taken and these were averaged.

## References


1. Noskievič, J. a kol.: Mechanic of Fluid, Publisher SNTL Praha, (1987), ISBN: 04-233-87.
2. Dvořák, V.: Hydromechanics of Fluid 1, Liberec (2017), ISBN: 978-80-7494-368-3.
3. Creo Distributed Batch 7.0, PTC Inc., 121 Seaport Blvd. Boston, MA 02210 USA, (2020).
4. Bojko, M.: 3D Fluid – Ansys Fluent, Publisher VŠB Ostrava, (2012), ISBN: 978-80-248-25607-3.
5. PTC Homepage, https:// www.ptc.com, last accessed 2022/09/02.
6. Electronic dose pourer was applicated on 09.11.2016 published in Boulletin 201645 as the Europe patent as Euro Patent Application EP 3 090 981.
7. Software, SolidWorks 2014 x64 Edition, https://www.solidworks.com/.
8. Software, Creo Direct 7.0.1.0., https://www.ptc.com/en/products/creo/elements-direct.
9. Software, Creo Parametric 7.0.1.0., https://www.ptc.com/en/products/creo/parametric.