Control unit of the autonomous electric platform

Petr Bílek[1], Ondřej Mach[1] and Pavel Jandura[1]

[1] Technical University of Liberec, Studentská 1402/2, 461 17 Liberec, Czech Republic
petr.bilek@tul.cz

Abstract. The functional model was made for development and implementation of the vehicle control unit of the autonomous electric platform. The unit operates 12V appliances and excels especially in advanced internal diagnostics. The board includes smart high side switches. It has several isolated CAN buses, through which it can delegate the warning signal to another unit in the hierarchy above. The unit is equipped with analog and digital inputs for connecting various sensors. All the pins on the output connector are protected against ESD and EMC. The unit was also tested on a demo-board in TUL laboratory especially the smart functions.

Keywords: Vehicle control unit, Smart switch, CAN bus, Electric vehicle.

1 Introduction

1.1 Requirements and commercial solutions

The Vehicle Control Unit (VCU) is responsible for controlling 12V electronics in the vehicle such as lights and other 12V appliances. The main requirements are:

1) digital inputs, analog inputs, pulse inputs, EMC (electro-magnetic compatibility, it is the ability of electrical device to function in its electromagnetic environment) and ESD (electro-static discharge, it is a momentary electric current between two electrically charged objects) protection is needed,
2) digital outputs with PWM (pulse width modulation, it is a method of controlling the power delivered to a load) future, protection against shortcut and open load, internal diagnostics is appreciated,
3) CAN (controller area network, it is a vehicle bus standard allowing communicating among vehicle units) bus, isolation is appreciated,
4) 7 – 36 V power voltage supply, sleep mode, special wake up input,
5) Real time clock backup, EEPROM (electrically erasable programmable read-only memory, it is a type of non-volatile memory used in electronics) is appreciated.

ECU (electronic control unit) has been requested from several companies. The main producers are Ecotrons [1], Sigratech [2], Continental [3],Dana - Pi Innovo [4], Bosch [5]. Common characteristics are:

M. Petr et al. (eds.), *62nd International Conference of Machine Design Departments (ICMD 2022)*,
Atlantis Highlights in Engineering 28,
https://doi.org/10.2991/978-94-6463-423-5_40

1) programming in Matlab, C and other languages,
2) sheet metal enclosure with multi-pin connector with appropriate moisture protection, see on Figure 1,
3) 10 – 20 active high and low digital inputs and 5 – 10 digital outputs, 1-3 CAN buses,
4) EMC and ESD protection,
5) limited or completely missing internal diagnostics,
6) good customer support,
7) high purchase price, usually more than 2000 USD/pcs,
8) very complicated hardware development.

Fig. 1. Picture of a typical electronic control unit in a vehicle.

Vehicle control units are constantly being developed and improved. In particular, safety - durability and reliability - have been improved and smart features integrated. Great developments and advances can also be seen in the field of vehicle driver diagnostics [6 – 8].

2 Own development of an electronic control unit

2.1 Block diagram and functionality description

For the electro-mobility project, a universal driving unit is being developed for an autonomous electric platform operating a 12V power branch including individual sensors and appliances. This control unit stands out in particular for its advanced internal diagnostics, where, for example, for each appliance its voltage, current or temperature is monitored. Each appliance is protected against overcurrent, overvoltage, short circuit or complete disconnection, or overheating is monitored. This makes it possible to warn of an imminent danger, for example of overloading of a component (higher than standard current consumption detected). The control unit has several CAN buses over, which it can delegate this warning signal to the next unit up the hierarchy. This makes it possible to prevent faults and keep the failure of the autonomous electrical platform to a minimum. The block diagram is shown on Figure 2.

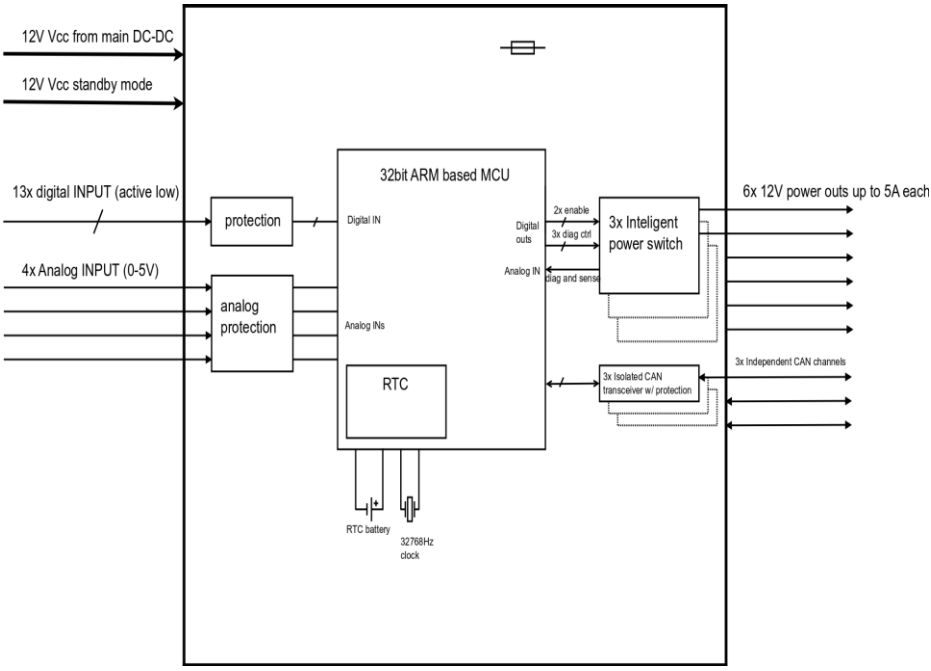

Fig. 2. Block diagram of the electronic control unit.

2.2 Electric schematics description

The universal ECU contains all the basic interfaces and typical peripherals in common standards of commercial automotive solutions. The computational core of the ECU is represented by a power-efficient ARM (advanced RISC machines, it is an inner architecture of microcontrollers) based 32-bit microcontroller, the STM32F413VGT3 from the Cortex-M4 series from STMicroelectronics, see Figure 1. In normal operating mode, it is clocked at a base frequency of 100 MHz, based on the integrated MEMS (micro-electro-mechanical system, it is the technology of microscopic devices) circuit IM801D-32-AH-25. Power-efficient modes (typically battery tasks) can then switch to variously more limited modes using a locally clocked 32.768 kHz crystal connected to the inner RTC (real time clock, it is an electronic device measuring the passage of time).

Operational and general initialization data is encrypted or possibly duplicated to an external AT24C512C EEPROM memory that is accessible via the I2C (inter-integrated circuit, it is synchronous, multi-master/multi-slave serial communication bus) bus. The HW (hardware) design of this version still remains partially open to the user in the form of an advanced development kit and therefore the communication channels, including UART (universal asynchronous receiver-transmitter, it is microcontroller interface for asynchronous serial communication) bus and CAN interface, can be internally accessed via marked 2.54 mm spacing studs. The internal tempera-

ture sensing of the box including both low current and power electronics generating thermal energy is monitored by the TMP236A2 analogue circuit. Its resolution is accurate to ±0.5 °C in a temperature range of -10 °C to +125 °C, which complements the requirements of the HW application as a safety feature. Output CAN communication is mediated by three separate ISO1044 excitation circuits meeting the ISO 11898-2:2016 physical layer standard with support for a baud rate of 5 Mbps. Electronic robustness in industrial/automotive environments is achieved by galvanic isolation using the PDS1-S3-S5 DC/DC (direct current/direct current, it is a device converts DC supply to higher or lower voltage) converter with a guaranteed electrical strength of 1.5 kV.

Electrostatic discharge spikes are limited by the specific bidirectional ESDCAN01 transistors. The pins of the digital input interface DI-x are pulled by internal pull-up resistors of 39 kΩ to logic one (internal 3.3 V) during normal operation, see Figure 2. Changes in the logic level for the MCU (micro-controller unit) signal pin are achieved by pulling down to the common GND (ground, usually minus pole of the voltage supply) potential. The DI-12 and DI-13 signals can be used extensively for high-speed frequency sensing from specific sensors - they are routed directly through the MCU counters. The analog input interface pins assume an operating range of 0 V to 5 V (based on the associated 5.0 V PWM outputs). The pseudo-digital output pins are logic switched via TPS2HB16F diagnostic switches. The output voltage corresponds to the input voltage (+12 V-IN) and is electronically component-protected at 3.5 A per channel. The diagnostics consists of overload and overtemperature monitoring and separate control. The power supply of the individual internal circuits operates with a uniform 3.3 V voltage level stabilized by a TPS62132 DC/DC converter. The 5.0 V / 3 A output power channel for external sensor needs is handled by the DC/DC converter TPS62133. A general power input range from 7 V to 15 V covers the common voltage limits for the entire unit.

The user interface of the developed unit is available via TE Connectivity's 60 pin 6437288-3 connector from the SUPER SEAL automotive connector series, see Figure 3 and 4. The unit offers 13 digital inputs (pull-up resistors at 3.3 V), 4 analog inputs (0 V to 5.0 V), 6 digital outputs, two separate CAN buses, a shared set of 5.0 V / 3 A PWR outputs and GND potential. The nominal 12 V DC power supply is separated into two branches to Steadily Supply (+12 V-SS) for continuous power to the electronics in sleep mode and a conventional power supply also available for peripherals (+12 V-IN). All digital/analog input pins are protected against common ESD discharges.

2.3 Description of the firmware

The programming of the microcontroller used in the ECU under development is done through the serial interface of the SWD (serial wire debug, it is an alternative 2-pin electrical interface for programing microcontrollers) interface. J-link programmers from Segger were purchased for this purpose. The unit does not yet include its own bootloader, but in the future, it is planned to implement this functionality with the possibility of updating the firmware via CAN using the ISO 14229-1 protocol, also

known as UDS (unified diagnostic service, it is a protocol used by diagnostic systems to communicate with ECUs in vehicles). For the needs of various applications, a CAN protocol based in part on CAN open is being developed for the unit, which enables control and monitoring of the operating states of the units on the bus, synchronization of data signals and also service diagnostics. Originally, the unit was planned to deploy software based on the AUTOSAR (automotive open system architecture) standard, but this proved too complex to implement. The use of the CAN open protocol and the development of a custom application on top of it proved to be another option. However, this protocol contains parts that are not necessary for our application, and there is a limit to the amount of process data that can be transferred. The reason for the development of our own protocol was to simplify the existing solution to only the necessary functionality, to increase the maximum possible volume of transmitted process data and at the same time to enable diagnostics of the unit using the ISO 14229-1 UDS or ISO 15031-1 OBD2 (on-board diagnostics, it is a vehicle's self-diagnostic and reporting capability) protocol. Both of these protocols include a transport layer based on the ISO15765-2 (ISO-TP) standard to enable segmented transmission of data packets of sizes beyond the capabilities of the CAN interface. However, this layer is not supported by the CAN open protocol.

The protocol for the unit is independent of the hardware, after changing it, it is sufficient to implement the drivers, i.e. the basic set of functions for operating the hardware, and then introduce them into the unit configuration. When deployed on a specific application, basic protocol parameters such as the unit's network address, process data transmission periods and bus baud rate must be configured. In addition, the user must implement custom functions that respond to individual events that may occur while the unit is running (changes in operating states, communication errors, etc.). The interaction between the user application and the unit's communication layer is through a data structure containing the process data of the unit and, depending on the configuration, data received from other units. The user can also provide a function call to convert raw data from the bus to signals of the specific data type required by the application. Diagnostic and operational data that must be retained after power is removed is written to the EEPROM contained in the unit. In the event of a service intervention, it is therefore possible to find out what faults have occurred on the unit and, if the RTC peripheral is correctly set, the time and date of the event can also be found.

3 Conclusion

The vehicle control unit was designed, physically constructed, programmed and tested on a test bench in the TUL laboratory, Figure 3. In particular, its smart functions such as sleep mode, wake-up and smart switches were tested.

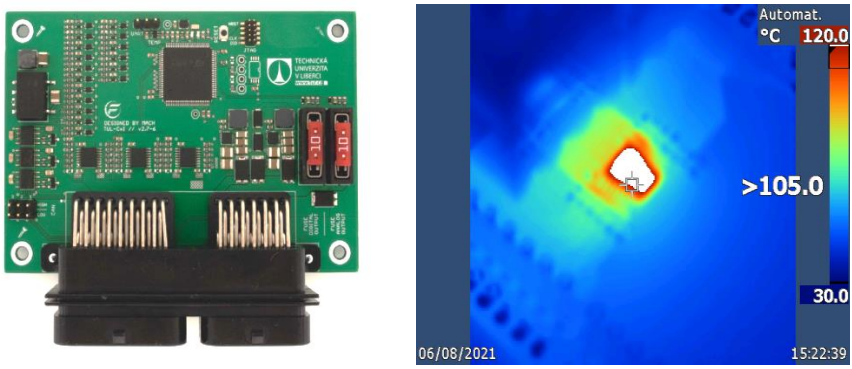

Fig. 3. On the left: picture of the board and on the right: picture from a thermal camera of a smart switch in shortcut and heated up by an electric fan.

The high side smart switches were tested in terms of their internal diagnostics, such as current measuring, short cut or open load detection. They were also tested in terms of protections such as thermal protection and short circuit protection, Figure 3. The Figure 4 shows time waveform of the current from oscilloscope during testing of a smart switch. In the graph, we can observe that as soon as a short circuit occurs, the smart switch repeatedly tries to turn on and after detecting the short circuit, it immediately turns off. As soon as the temperature rises due to external circumstances (in our case heating with a hair dryer up to 100 °C) the smart switch switches off completely and waits for the temperature to drop.

Fig. 4. Time waveform of current from oscilloscope

The newly developed control unit has a very wide range and quantity of inputs and a sufficient number of power outputs. This makes the unit very versatile and can be used in a wide range of applications within vehicles. A major advantage of this newly

developed control unit is the special switches on the outputs, which are protected against adverse electrical events and at the same time allow sufficient current to be supplied to various loads. The smart outputs can supply current to the load using a PWM signal, they can switch both capacitive and inductive loads, it is possible to set the shape of the rising edge, current limiting and more. All inputs are again protected and have a wide input voltage range. They can handle a wide range of signals such as analog signals, digital signals and pulse signals.

4 Acknowledgement

This work was supported by the Ministry of Education, Youth and Sports of the Czech Republic and the European Union (European Structural and Investment Funds - Operational Programme Research, Development and Education) in the frames of the project “Modular platform for autonomous chassis of specialized electric vehicles for freight and equipment transportation”, Reg. No. CZ.02.1.01/0.0/0.0/16_025/0007293.

References

1. Ecotrons Homepage, https://ecotrons.com, last accessed 2022/09/21.
2. Sigratech Homepage, http://www.sigratech.de/, last accessed 2022/09/21.
3. Continental - ECU Homepage, https://www.continental-automotive.com/en-gl/Passenger-Cars/Architecture-and-Networking/Control-Units, last accessed 2022/09/21.
4. Dana – open ECU Homepage, https://openecu.com/, last accessed 2022/09/21.
5. Bosch - ECU Homepage, https://www.bosch-mobility-solutions.com/en/solutions/control-units/engine-control-unit/, last accessed 2022/09/21.
6. Joachim Kleylein-Feuerstein, Fabian Joas, Rolf Steinhilper, Remanufacturing of Electronic Control Units: An RFID Based (Service) Interface, Procedia CIRP, Volume 29, 2015, Pages 168-172.
7. Kamil Çağatay Bayindir, Mehmet Ali Gözüküçük, Ahmet Teke, A comprehensive overview of hybrid electric vehicle: Powertrain configurations, powertrain control techniques and electronic control units, Energy Conversion and Management, Volume 52, Issue 2, 2011, Pages 1305-1313.
8. Zhu Yunzheng, Qu Shaofei, Allen C. Huang, Xu Jianhong, Smart Vehicle Control Unit - an integrated BMS and VCU System, IFAC-PapersOnLine, Volume 51, Issue 31, 2018, Pages 676-679.